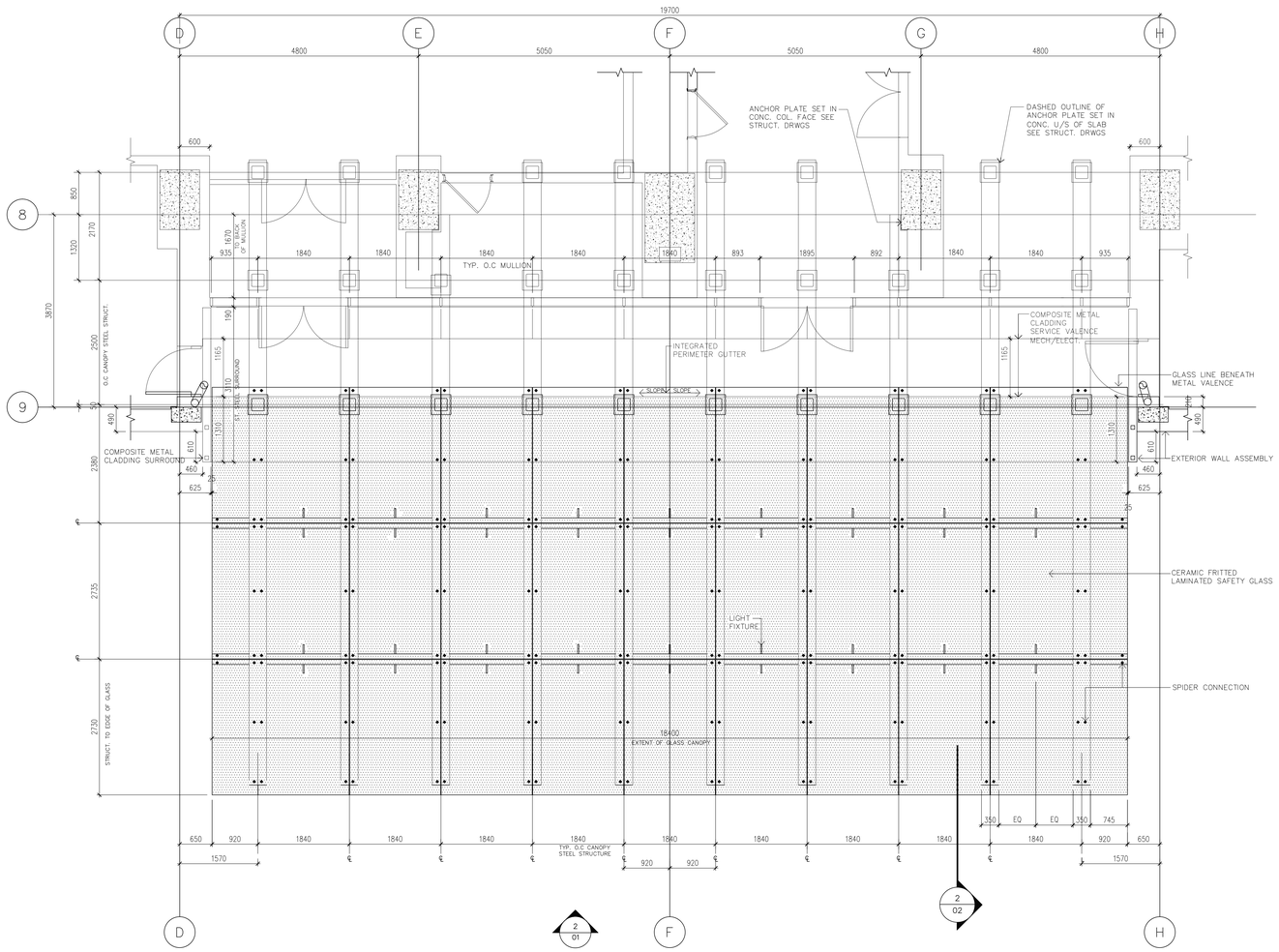

1 / 01 REFLECTED CEILING PLAN MAIN CANOPY
1 : 50 WEST TOWER

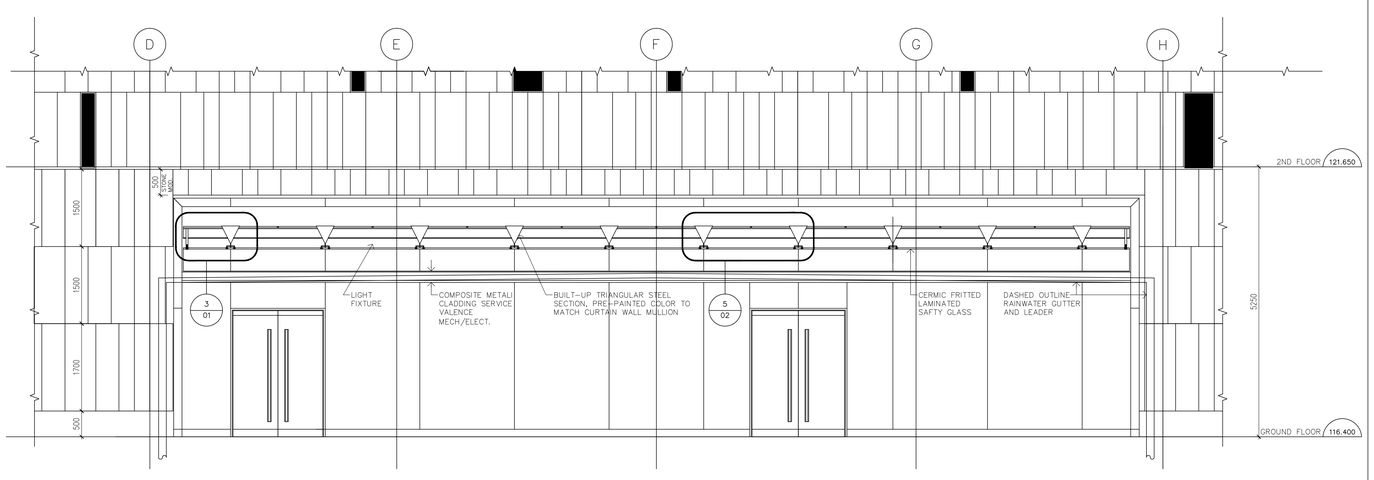

2 / 01 FRONT ELEVATION MAIN CANOPY
1 : 50 WEST TOWER

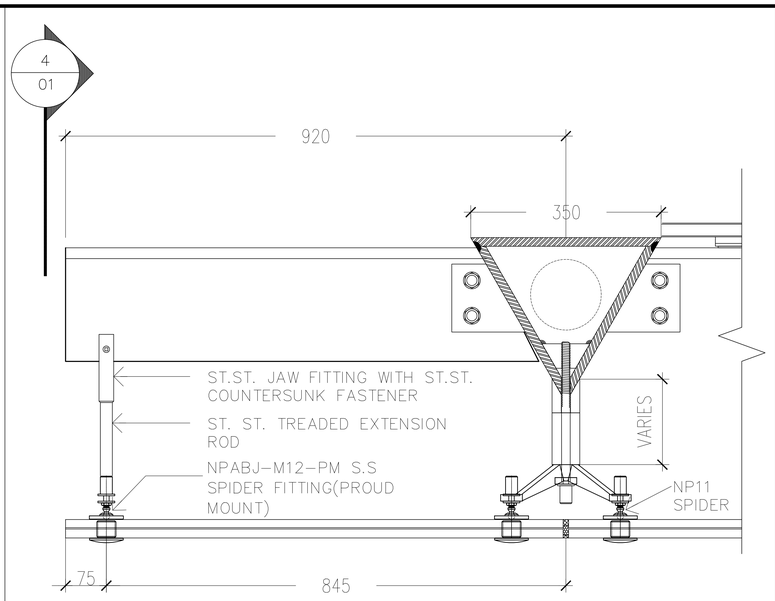

3 / 01 PERIMETER DETAIL
1 : 10 SECTION VIEW

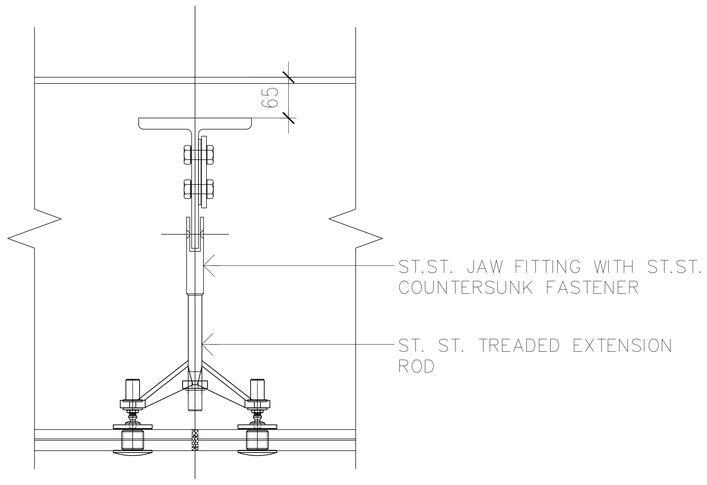

4 / 01 PERIMETER DETAIL
1 : 10 SECTION VIEW

FIRST CLASS ENGINEERING
north american office

P:+1(905) 264-6981
F:+1(866) 778-9115

DRAWING LEGEND

NO	DESCRIPTION	REV
01	ELEVATION, PLAN & DETAIL	0
02	DETAILS	0

No.	REVISIONS	DATE/BY
0		DEC.30/2010 TD

ENGINEER STAMP

NUPRESS FACADES
FIRST CLASS ENGINEERING
north american office
ph: +1 905.264.6981 fax: +1 866.778.9115
ph: +61 2 4903.9300 acn: 001 068 220
fax: +61 2 4903.9350 abn: 36 001 068 220
email: sales@nupress.com.au wbe: www.nupress.com.au

NUPRESS GROUP ASSUMES NEITHER RESPONSIBILITY NOR LIABILITY FOR ANY ALTERATIONS OR REVISIONS MADE TO OUR ORIGINAL AUTOCAD DRAWINGS BY ANY UNAUTHORIZED PERSONS. NUPRESS GROUP ALSO ASSUMES NEITHER RESPONSIBILITY NOR LIABILITY FOR DETAILS AFFECTING ANY WORK BUT OUR OWN. NUPRESS GROUP WILL NOT BE RESPONSIBLE FOR ANY ERRORS OR DISCREPANCIES WHICH MAY OCCUR THROUGH THE USE OF THESE DRAWINGS BY ANY OTHER TRADES.

DO NOT SCALE DRAWING	SHEET SIZE: 36x48(914x1219)
DATE: DECEMBER, 2010	DRAWN BY: TD
SCALE: AS NOTED	CHECKED BY:

JOB NAME:
FACADES COMPONENTS

TITLE:
CANOPY
ELEVATION, PLAN & DETAIL

DWG. No. 01 OF 02

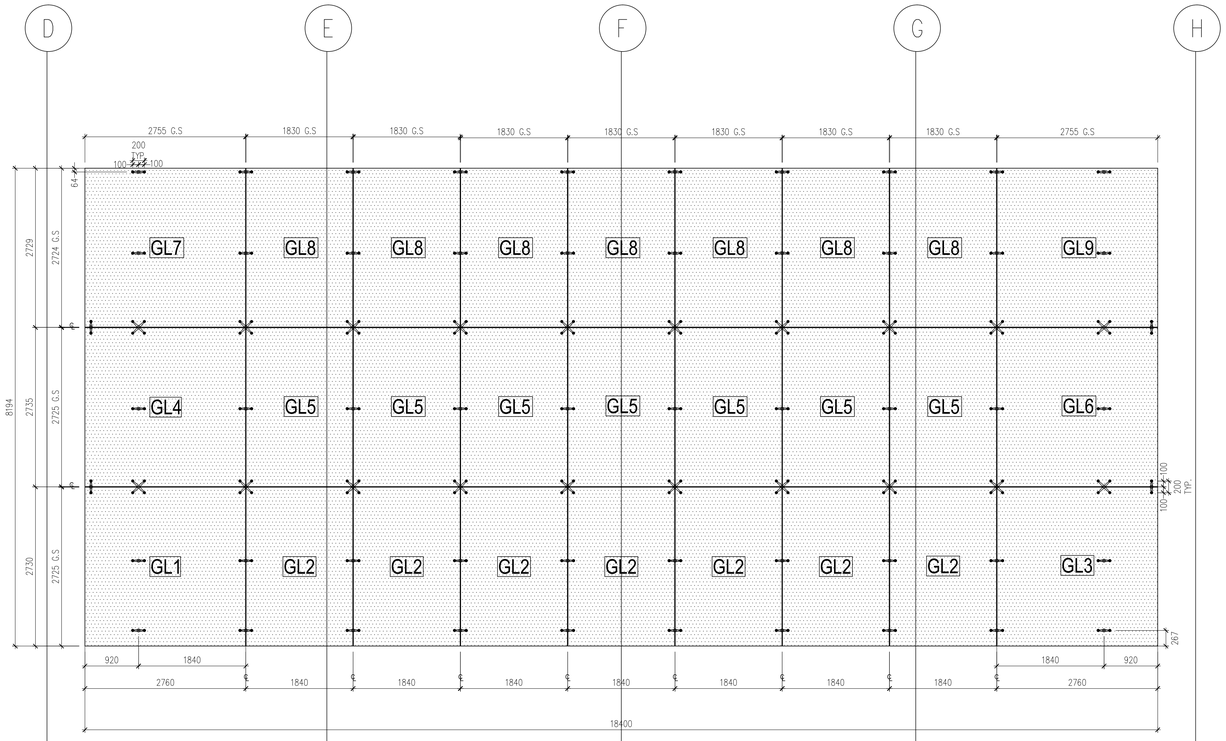

1 / 02 MAIN CANOPY GLASS ELEVATION
1 : 50 MAIN CANOPY

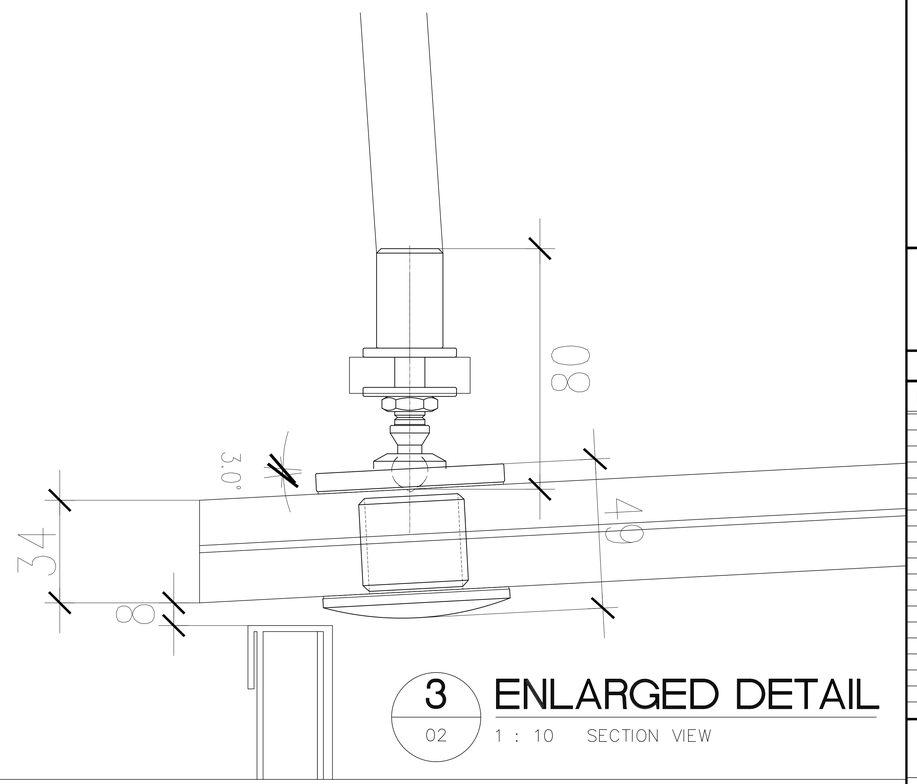

3 / 02 ENLARGED DETAIL
1 : 10 SECTION VIEW

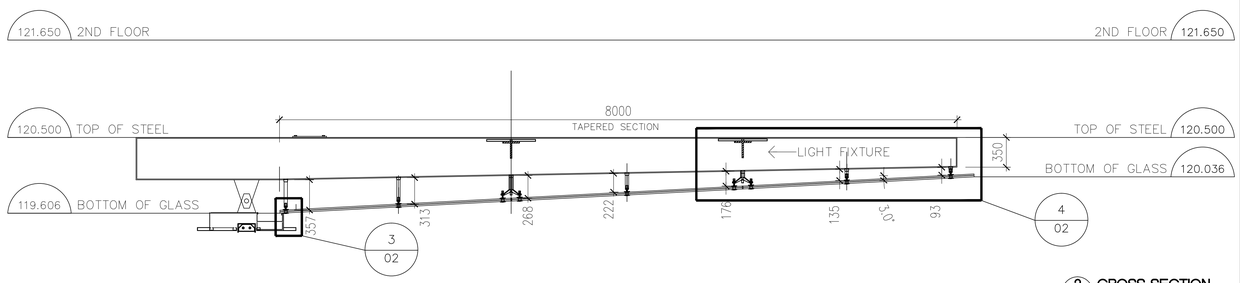

2 / 02 CROSS SECTION
1 : 10 SECTION VIEW

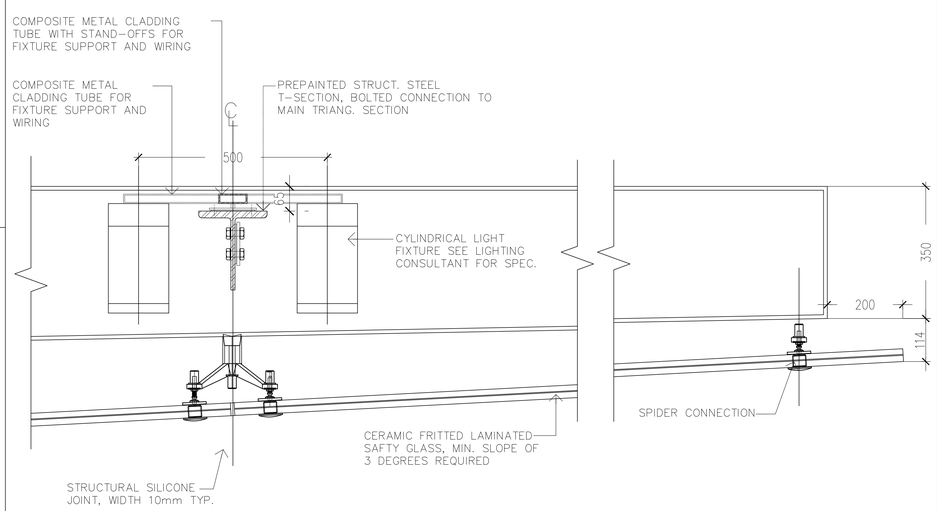

4 / 02 ENLARGED DETAIL
1 : 10 SECTION VIEW

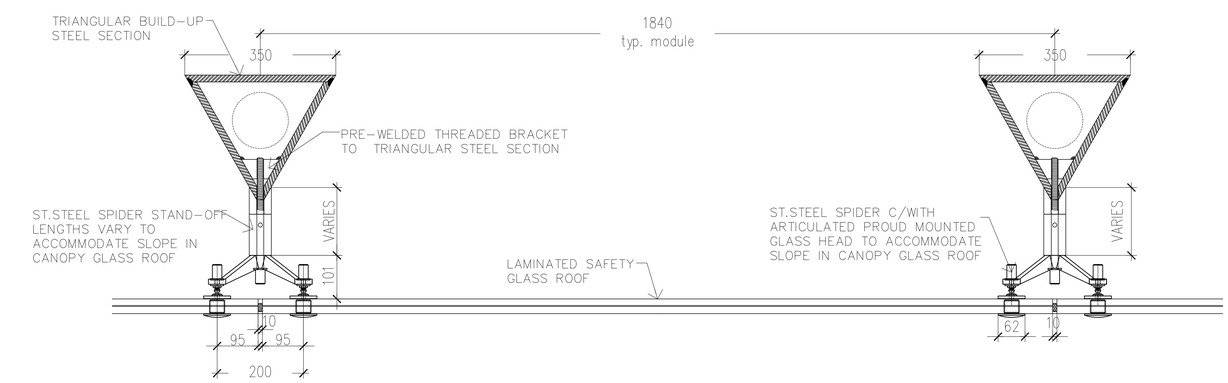

5 / 02 ENLARGED DETAIL
1 : 10 SECTION VIEW

FIRST CLASS ENGINEERING
north american office

P:+1(905) 264-6981
F:+1(866) 778-9115

DRAWING LEGEND

NO	DESCRIPTION	REV

No.	REVISIONS	DATE/BY
0		DEC.30/2010 TD

ENGINEER STAMP

NUPRESS FACADES
FIRST CLASS ENGINEERING
north american office
ph: +1 905.264.6981 fax: +1 866.778.9115
ph: +61 2 4903.9300 acn: 001 068 220
fax: +61 2 4903.9350 abn: 36 001 068 220
email: sales@nupress.com.au wbe: www.nupress.com.au

NUPRESS GROUP ASSUMES NEITHER RESPONSIBILITY NOR LIABILITY FOR ANY ALTERATIONS OR REVISIONS MADE TO OUR ORIGINAL AUTOCAD DRAWINGS BY ANY UNAUTHORIZED PERSONS. NUPRESS GROUP ALSO ASSUMES NEITHER RESPONSIBILITY NOR LIABILITY FOR DETAILS AFFECTING ANY WORK BUT OUR OWN. NUPRESS GROUP WILL NOT BE RESPONSIBLE FOR ANY ERRORS OR DISCREPANCIES WHICH MAY OCCUR THROUGH THE USE OF THESE DRAWINGS BY ANY OTHER TRADES.

DO NOT SCALE DRAWING

SHEET SIZE: 36x48(914x1219)

DATE: DECEMBER, 2010

DRAWN BY: TD

SCALE: AS NOTED

CHECKED BY:

JOB NAME:

FACADES COMPONENTS

TITLE:

CANOPY DETAILS

DWG. No. 02 OF 02