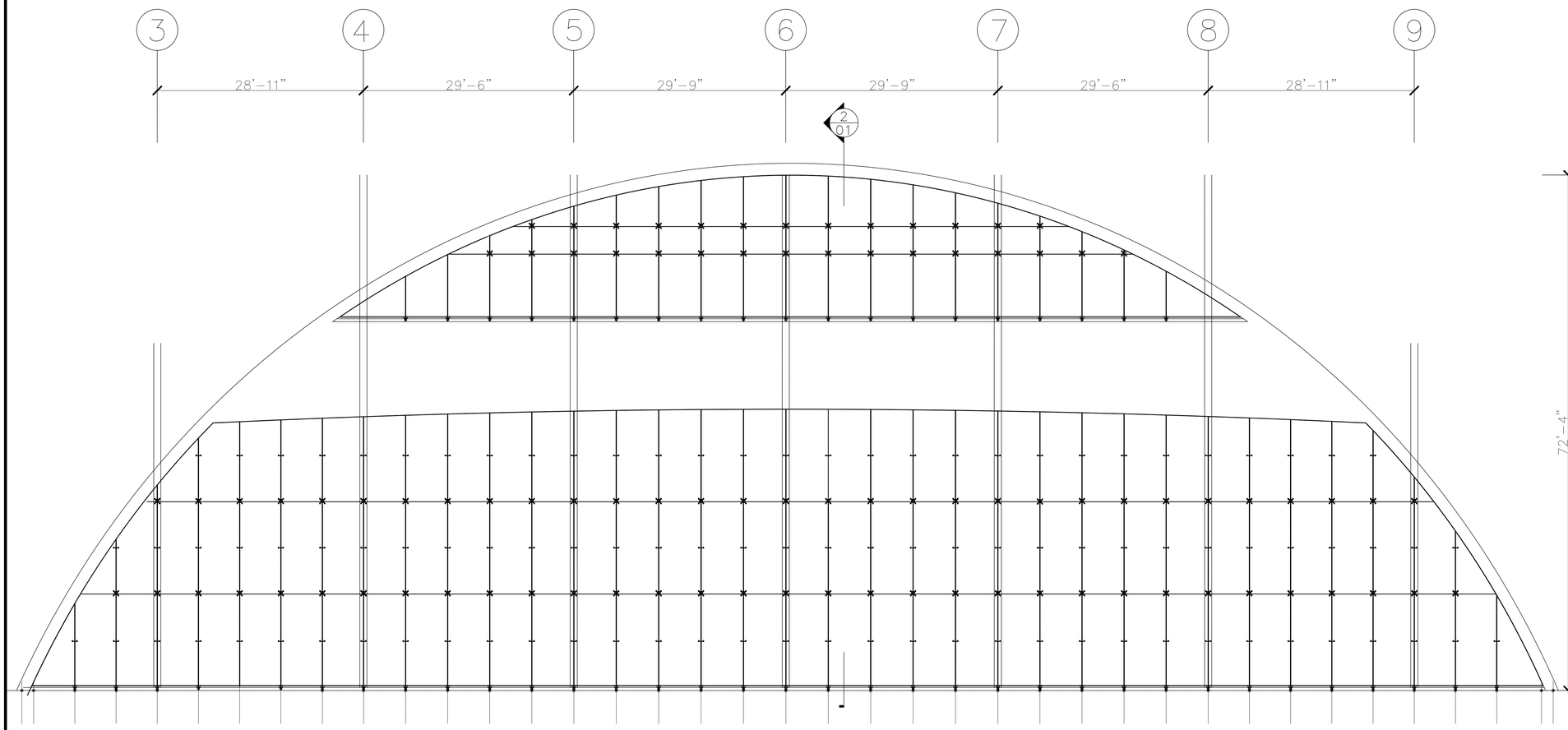

1 ELEVATION
Scale: 1/8"=1-0"

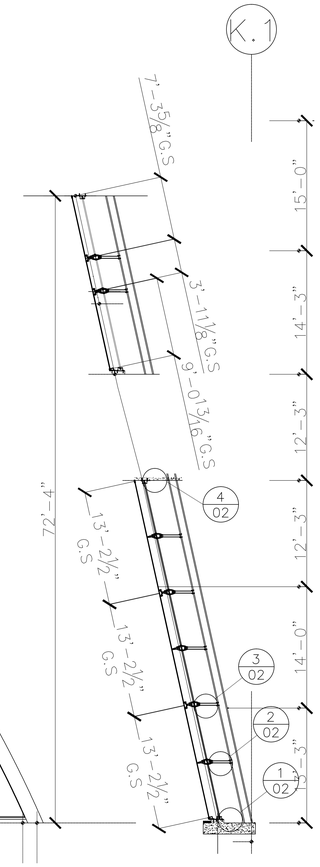

2 SECTION
Scale: 1/8"=1-0"

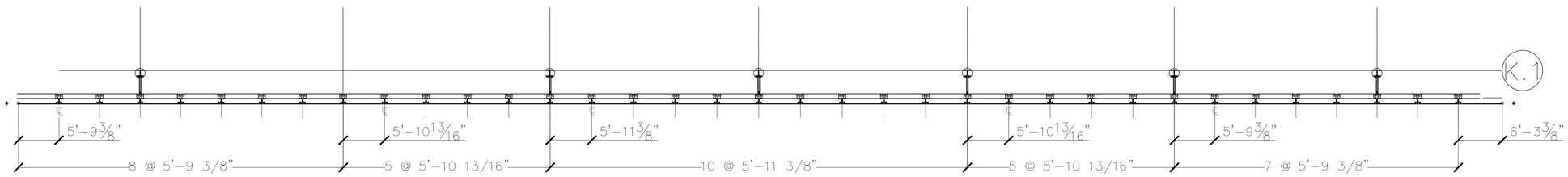

3 PLAN
Scale: 1/8"=1-0"

FIRST CLASS ENGINEERING
north american office

P:+1(905) 264-6981
F:+1(866) 778-9115

DRAWING LEGEND

NO	DESCRIPTION	REV
01	ELEVATION, SECTION & PLAN	0
02	DETAILS	0

No.	REVISIONS	DATE/BY
0		DEC.30/2010 TD

ENGINEER STAMP

NUPRESS FACADES
FIRST CLASS ENGINEERING
north american office
ph: +1 905.264.6981 fax: +1 866.778.9115
ph: +61 2 4903.9300 acn: 001 068 220
fax: +61 2 4903.9350 abn: 36 001 068 220
email: sales@nupress.com.au wbe: www.nupress.com.au

NUPRESS GROUP ASSUMES NEITHER RESPONSIBILITY NOR LIABILITY FOR ANY ALTERATIONS OR REVISIONS MADE TO OUR ORIGINAL AUTOCAD DRAWINGS BY ANY UNAUTHORIZED PERSONS. NUPRESS GROUP ALSO ASSUMES NEITHER RESPONSIBILITY NOR LIABILITY FOR DETAILS AFFECTING ANY WORK BUT OUR OWN. NUPRESS GROUP WILL NOT BE RESPONSIBLE FOR ANY ERRORS OR DISCREPANCIES WHICH MAY OCCUR THROUGH THE USE OF THESE DRAWINGS BY ANY OTHER TRADES.

DO NOT SCALE DRAWING	SHEET SIZE: 36x48(914x1219)
DATE: DECEMBER, 2010	DRAWN BY: TD
SCALE: AS NOTED	CHECKED BY:

JOB NAME:

FACADES COMPONENTS

TITLE: STEEL TRUSS SUPPORTED GLASS WALL
ELEVATION, SECTION & PLAN

DWG. No. 01 OF 02

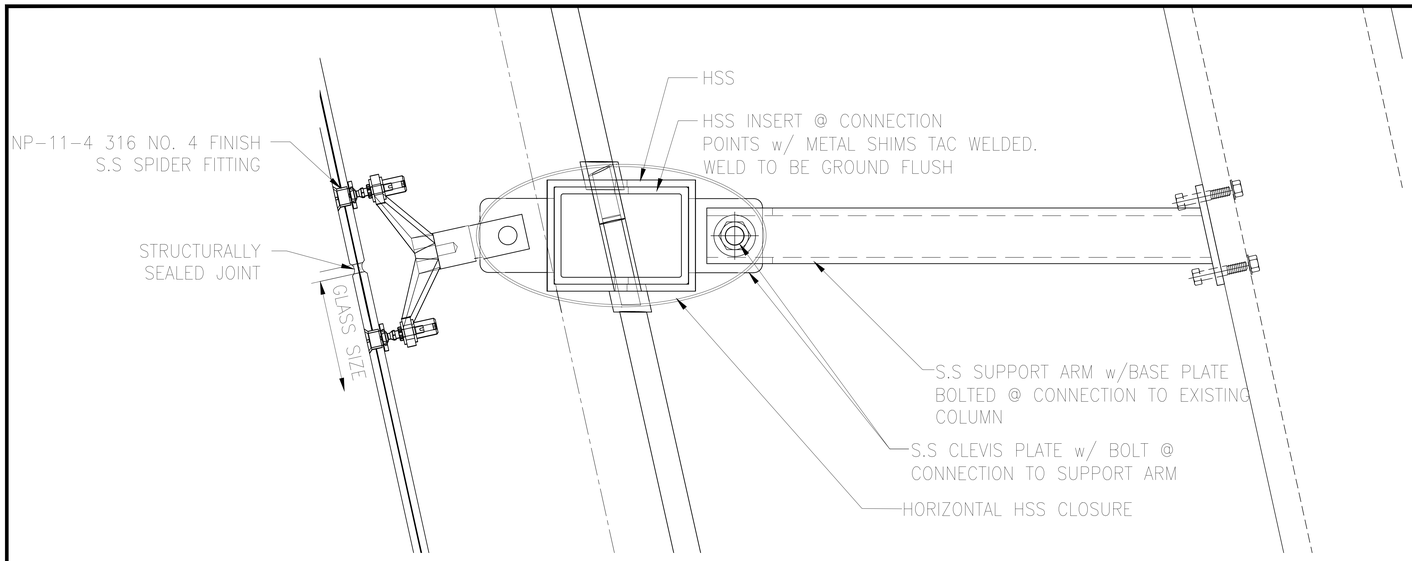

3 TYPICAL SECTION @ GLASS JOINT w/ COLUMN CONNECTION
Scale: 3"=1-0"

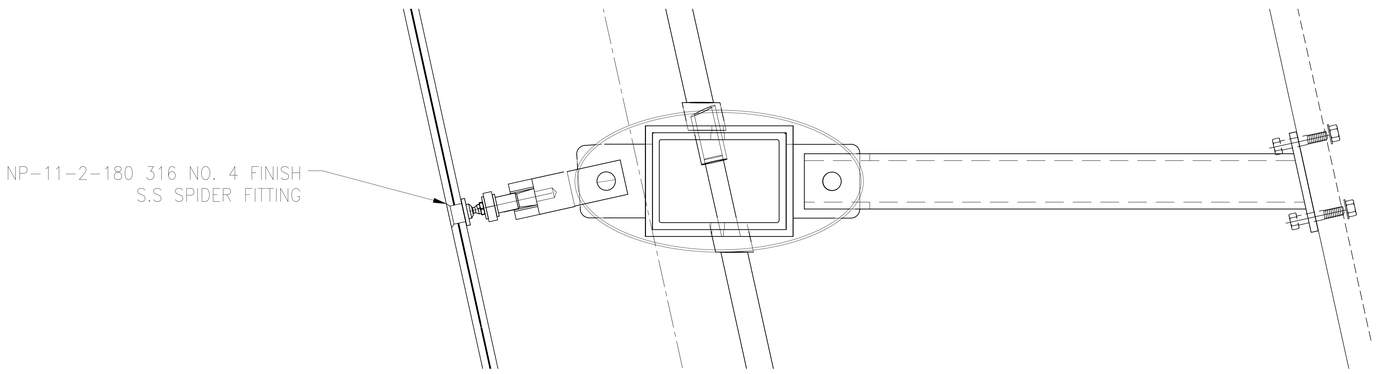

2 TYPIAL INTERMEDIATE SECTION w/ COLUMN CONNECTION
Scale: 3"=1-0"

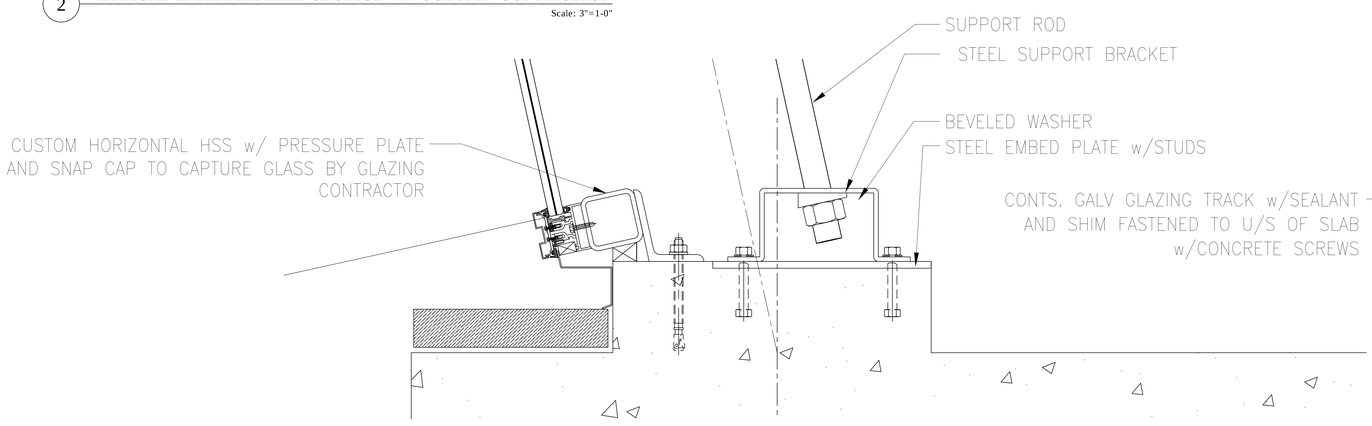

1 SILL SECTION
Scale: 3"=1-0"

HORIZONTAL CLADDING OPTION

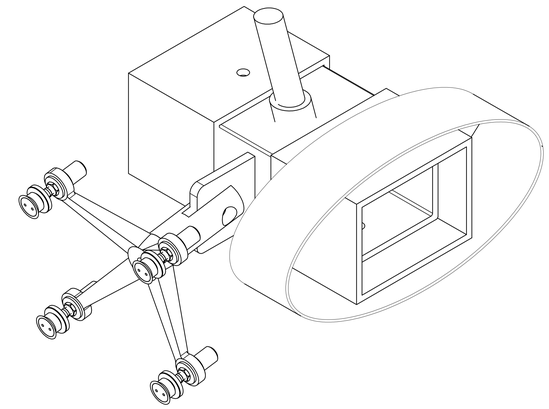

5 ISO VIEW FOR ROD CONNECTION
Scale: 1 1/2"=1-0"

LESS CLADDING

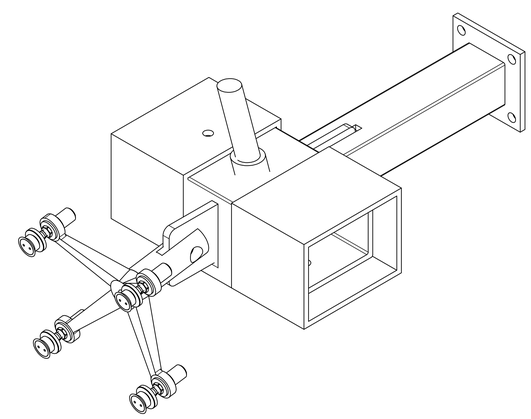

6 ISO VIEW FOR COLUMN CONNECTION
Scale: 1 1/2"=1-0"

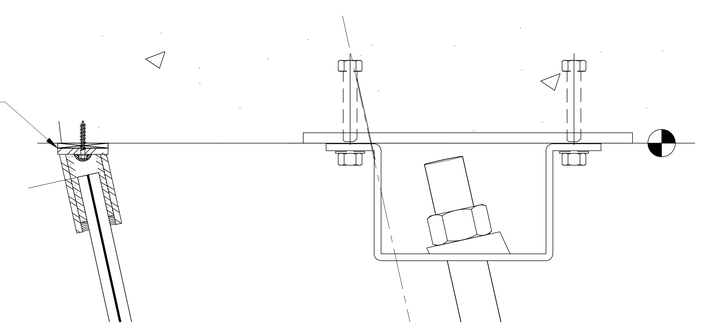

4 HEAD SECTION
Scale: 3"=1-0"

FIRST CLASS ENGINEERING
north american office

P:+1(905) 264-6981
F:+1(866) 778-9115

DRAWING LEGEND

NO	DESCRIPTION	REV

No.	REVISIONS	DATE/BY
0		DEC.30/2010 TD

ENGINEER STAMP

NUPRESS FACADES
FIRST CLASS ENGINEERING
north american office
ph: +1 905.264.6981 fax: +1 866.778.9115
ph: +61 2 4903.9300 acn: 001 068 220
fax: +61 2 4903.9350 abn: 36 001 068 220
email: sales@nupress.com.au wbe: www.nupress.com.au

NUPRESS GROUP ASSUMES NEITHER RESPONSIBILITY NOR LIABILITY FOR ANY ALTERATIONS OR REVISIONS MADE TO OUR ORIGINAL AUTOCAD DRAWINGS BY ANY UNAUTHORIZED PERSONS. NUPRESS GROUP ALSO ASSUMES NEITHER RESPONSIBILITY NOR LIABILITY FOR DETAILS AFFECTING ANY WORK BUT OUR OWN. NUPRESS GROUP WILL NOT BE RESPONSIBLE FOR ANY ERRORS OR DISCREPANCIES WHICH MAY OCCUR THROUGH THE USE OF THESE DRAWINGS BY ANY OTHER TRADES.

DO NOT SCALE DRAWING
SHEET SIZE: 36x48(914x1219)
DATE: DECEMBER, 2010
DRAWN BY: TD
SCALE: AS NOTED
CHECKED BY:

JOB NAME: FACADES COMPONENTS

TITLE: TENSION ROD DETAILS

DWG. No. 02 OF 02