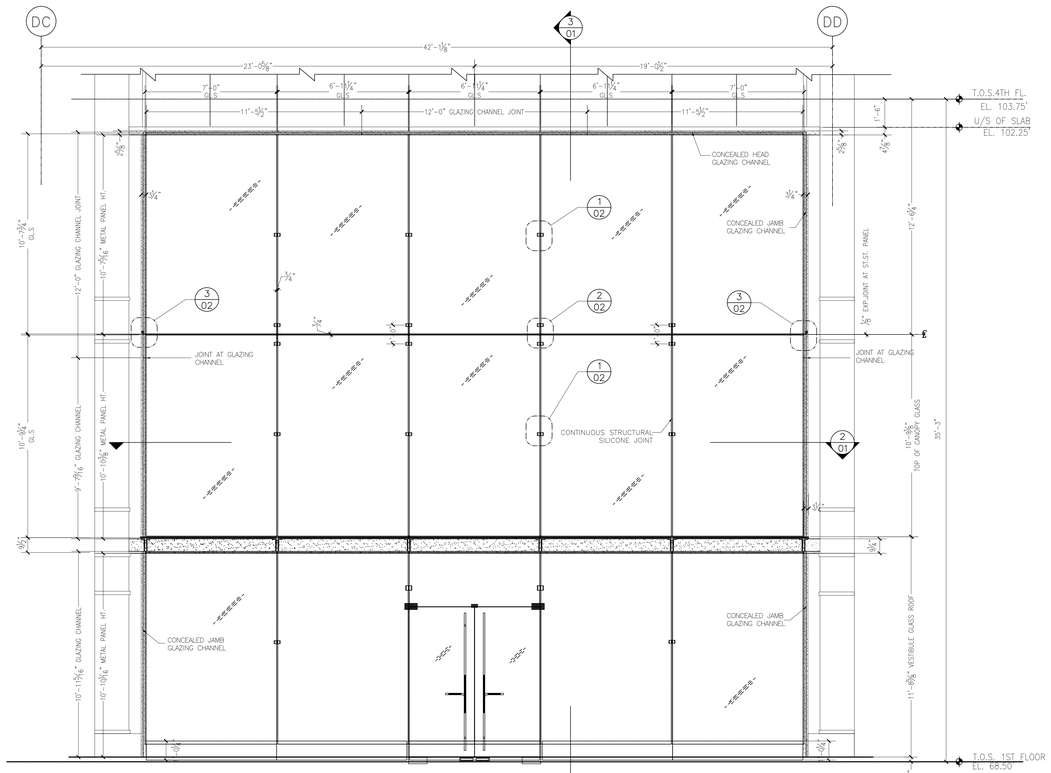

1/01 ELEVATION AT NORTH ENTRANCE
SCALE: 1/2"=1'-0"

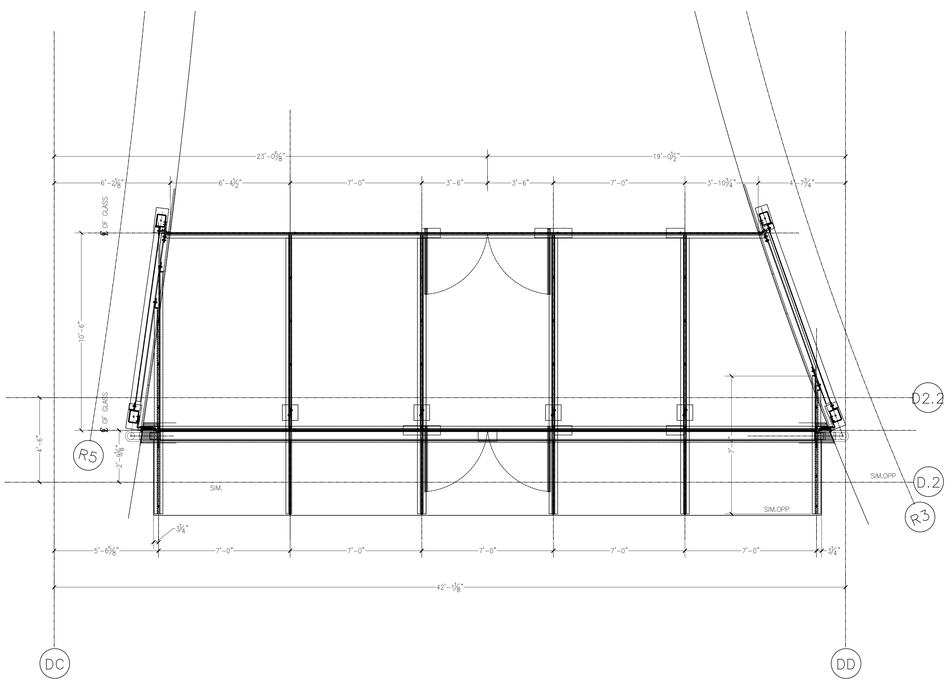

2/01 CANOPY PLAN AT NORTH ENTRANCE
SCALE: 1/2"=1'-0"

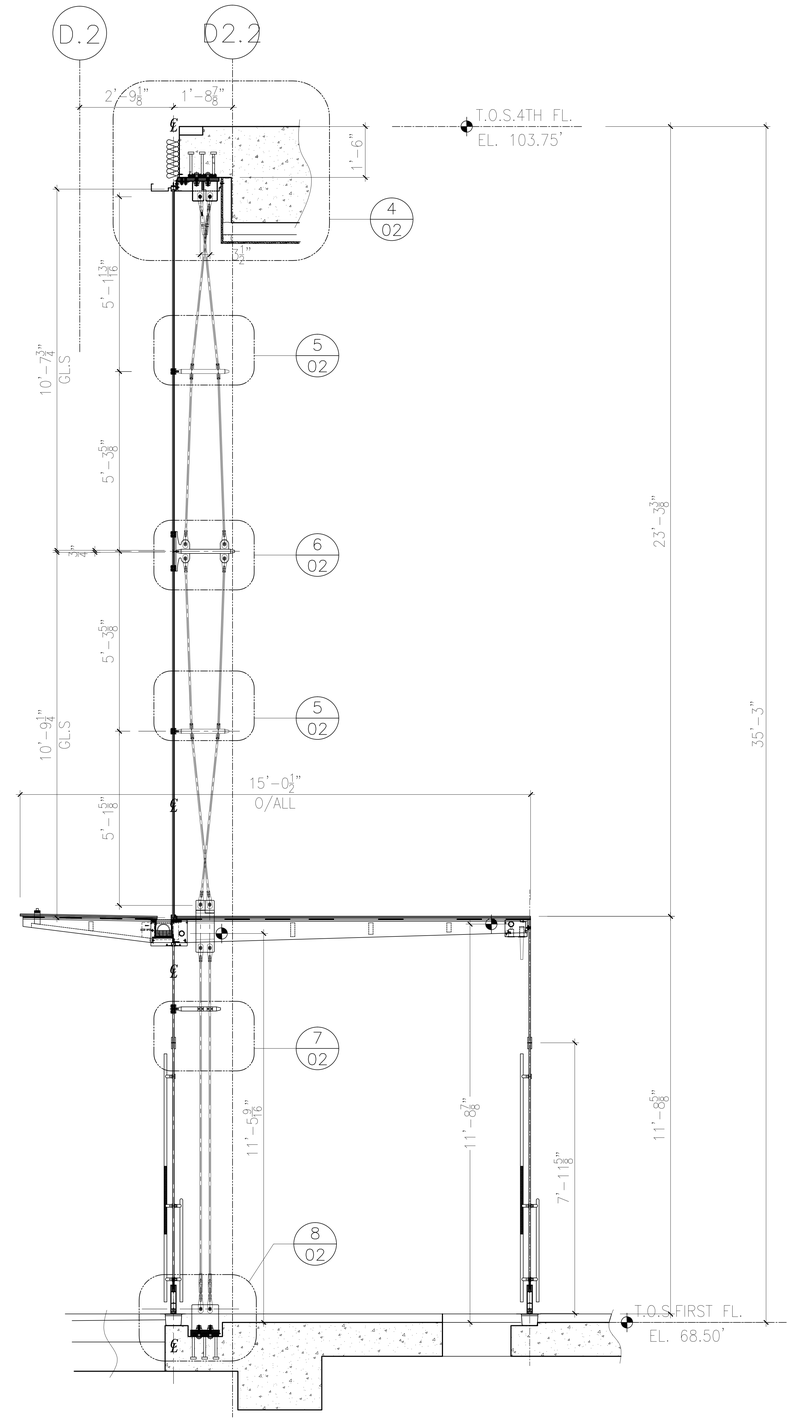

3/01 SECTION AT NORTH ENTRANCE
SCALE: 1/2"=1'-0"

FIRST CLASS ENGINEERING
north american office

P:+
F:+

DRAWING LEGEND

NO	DESCRIPTION	REV
01	.	
02	.	

No.	REVISIONS	DATE/BY
0	.	NOV.30/2010 TD

ENGINEER STAMP

NUPRESS FACADES
FIRST CLASS ENGINEERING
north american office
ph: +1 905.264.6981 fax: +1 866.778.9115
ph: +61 2 4903.9300 acn: 001 068 220
fax: +61 2 4903.9350 abn: 36 001 068 220
email: sales@nupress.com.au wbe: www.nupress.com.au

NUPRESS GROUP ASSUMES NEITHER RESPONSIBILITY NOR LIABILITY FOR ANY ALTERATIONS OR REVISIONS MADE TO OUR ORIGINAL AUTOCAD DRAWINGS BY ANY UNAUTHORIZED PERSONS. NUPRESS GROUP ALSO ASSUMES NEITHER RESPONSIBILITY NOR LIABILITY FOR DETAILS AFFECTING ANY WORK BUT OUR OWN. NUPRESS GROUP WILL NOT BE RESPONSIBLE FOR ANY ERRORS OR DISCREPANCIES WHICH MAY OCCUR THROUGH THE USE OF THESE DRAWINGS BY ANY OTHER TRADES.

DO NOT SCALE DRAWING	SHEET SIZE: 36x48(914x1219)
DATE: NOVEMBER, 2010	DRAWN BY: TD
SCALE: AS NOTED	CHECKED BY:

JOB NAME:
FACADES COMPONENTS

TITLE:
TENSION TRUSS WALL
ELEVATION, SECTION & PLAN

DWG. No. 1 OF 02

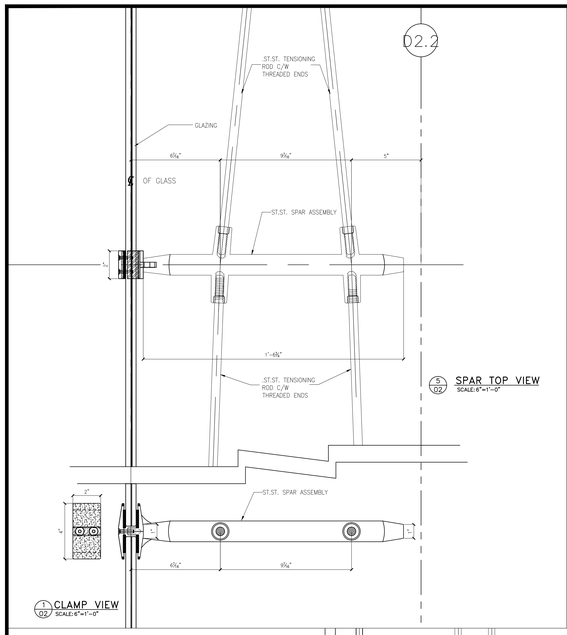

1/02 CLAMP VIEW
SCALE: 6"=1'-0"

5/02 SPAR TOP VIEW
SCALE: 6"=1'-0"

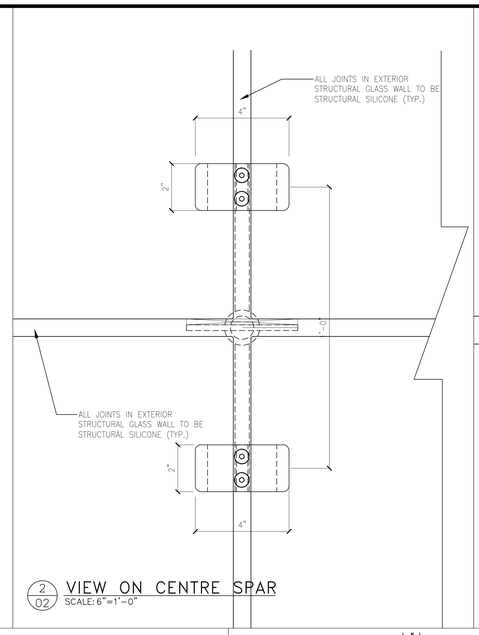

2/02 VIEW ON CENTRE SPAR
SCALE: 6"=1'-0"

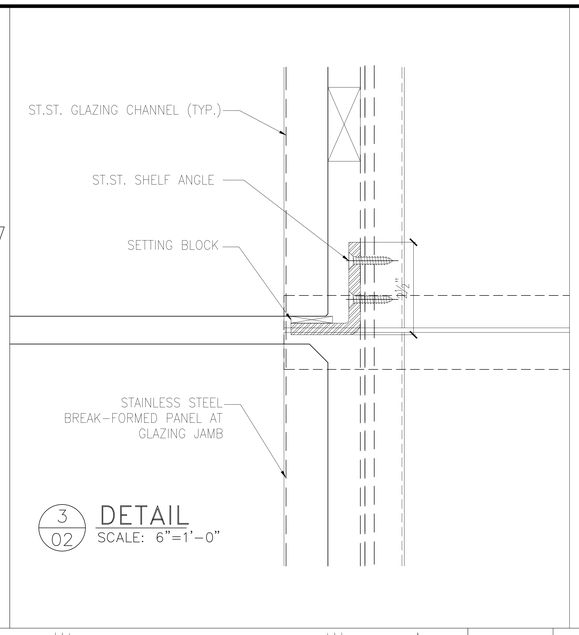

3/02 DETAIL
SCALE: 6"=1'-0"

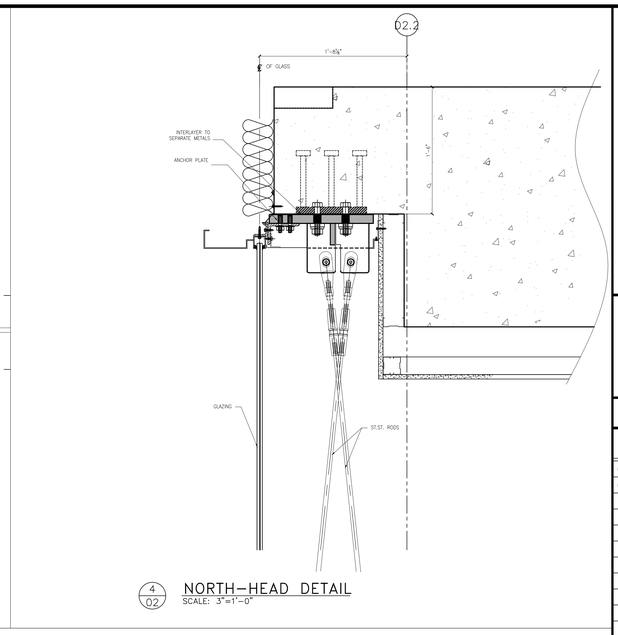

4/02 NORTH-HEAD DETAIL
SCALE: 3"=1'-0"

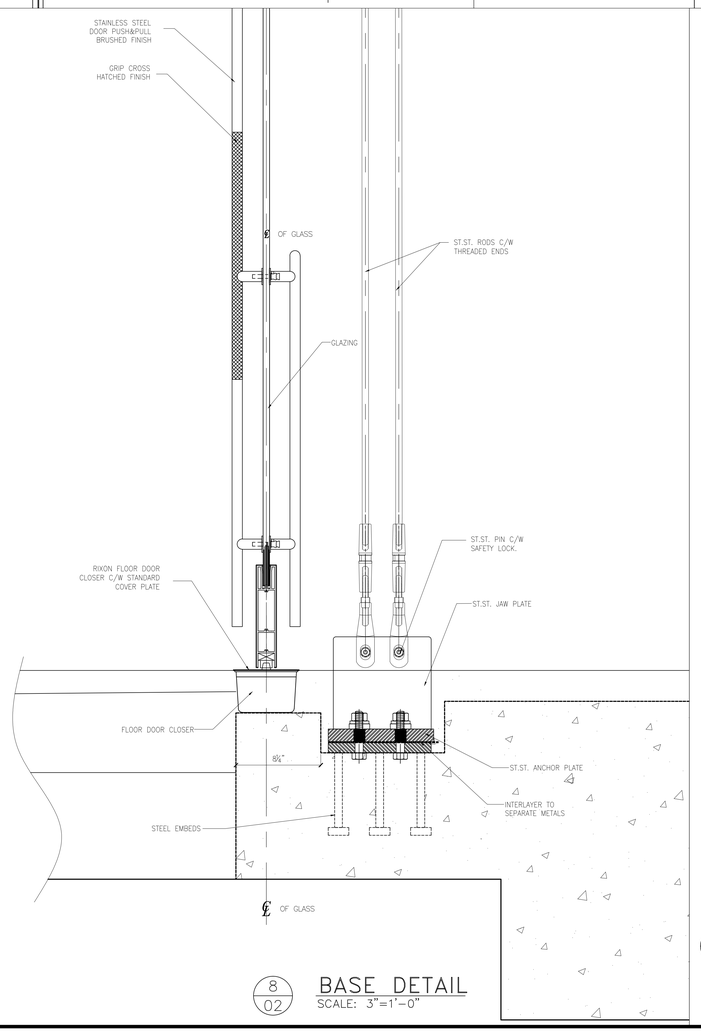

8/02 BASE DETAIL
SCALE: 3"=1'-0"

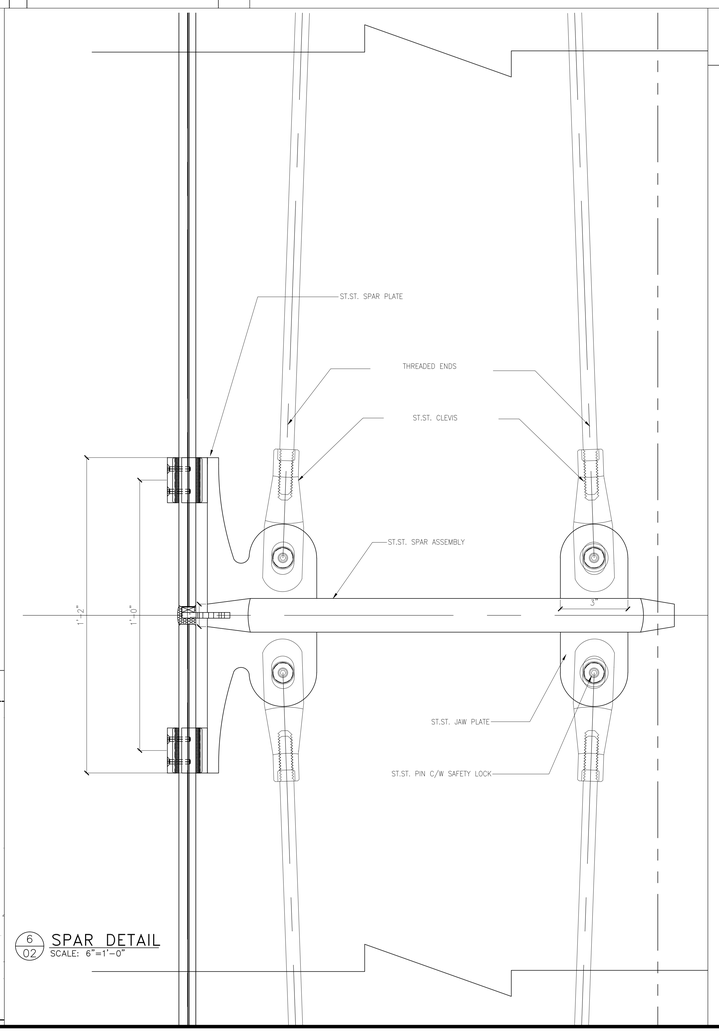

6/02 SPAR DETAIL
SCALE: 6"=1'-0"

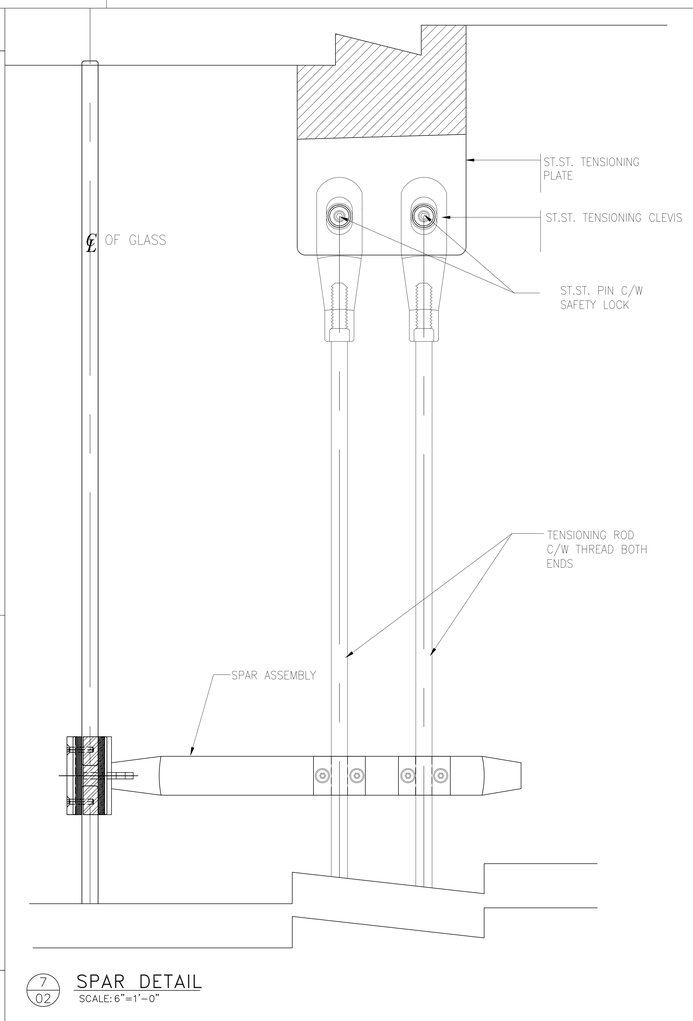

7/02 SPAR DETAIL
SCALE: 6"=1'-0"

FIRST CLASS ENGINEERING
north american office

P:+
F:+

DRAWING LEGEND

NO	DESCRIPTION	REV
01	.	
02	.	

No.	REVISIONS	DATE/BY
0		NOV.30/2010 TD

ENGINEER STAMP

NUPRESS FACADES
FIRST CLASS ENGINEERING
north american office
ph: +1 905.264.6981 fax: +1 866.778.9115
ph: +61 2 4903.9300 acn: 001 068 220
fax: +61 2 4903.9350 abn: 36 001 068 220
email: sales@nupress.com.au web: www.nupress.com.au

NUPRESS GROUP ASSUMES NEITHER RESPONSIBILITY NOR LIABILITY FOR ANY ALTERATIONS OR REVISIONS MADE TO OUR ORIGINAL AUTOCAD DRAWINGS BY ANY UNAUTHORIZED PERSONS. NUPRESS GROUP ALSO ASSUMES NEITHER RESPONSIBILITY NOR LIABILITY FOR DETAILS AFFECTING ANY WORK BUT OUR OWN. NUPRESS GROUP WILL NOT BE RESPONSIBLE FOR ANY ERRORS OR DISCREPANCIES WHICH MAY OCCUR THROUGH THE USE OF THESE DRAWINGS BY ANY OTHER TRADES.

DO NOT SCALE DRAWING

SHEET SIZE: 36x48(914x1219)

DATE: NOVEMBER, 2010

DRAWN BY: TD

SCALE: AS NOTED

CHECKED BY:

JOB NAME: FACADES COMPONENTS

TITLE: TENSION TRUSS WALL DETAILS

DWG. No. 1 OF 02